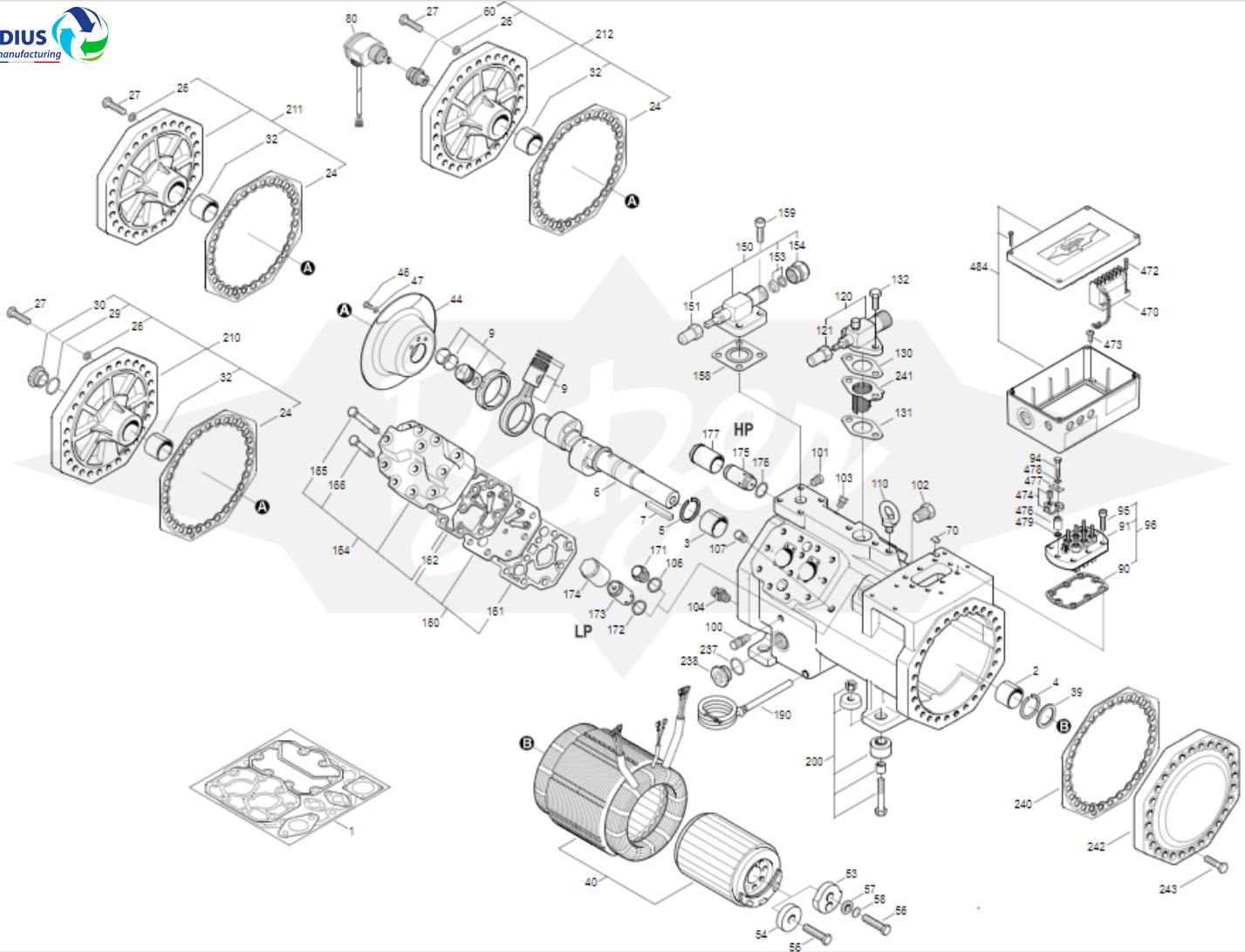GRADIUS Remanufacturing